**BORLA PERFORMANCE INDUSTRIES**
500 Borla Drive
Johnson City TN, 37604-7523
805-986-8600

# Exhaust System Installation for the Ford Mustang PN's-140583, 140584, 140585, 140586, 140587, 140588, 140589, 140590, 140591

******* Please compare the parts in the box with the bill of materials provided ***** to assure that you have all the parts necessary for this installation.**

**These instructions have been written to help you with the installation of your Borla Performance Exhaust System. Please read this document completely before beginning the installation of your system.**

**To ensure this part number fits your specific model year, please visit our website for the latest model year listings at www.BORLA.com**

**Thank you for purchasing a Borla Performance Cat-Back™ Exhaust System.**

**Borla Performance Cat-Back™ Exhaust Systems (PN's– 140589, 140590, 140591) are designed for the Ford Mustang GT equipped with a 5.0L V-8 engine, automatic or manual transmissions.**

**Borla Performance Cat-Back™ Exhaust Systems (PN's– 140586, 140587, 140588) are designed for the Ford Mustang equipped with a 3.7L V6 engine, automatic or manual transmissions.**

**Borla Performance Cat-Back™ Exhaust Systems (PN's– 140583, 140584, 140585) are designed for the Ford Mustang equipped with a 2.3L 4-Cyl Ecoboost engine, automatic or manual transmissions.**

Borla Performance Industries recommends that an exhaust shop or professional after market parts installer perform the installation of this system. However, if you decide to perform the installation on your own it is recommended that two people are used. This installation should not be performed by one person due to the risk of injury. Ensure the installers use all under car safety precautions including eye protection.

*Please take time to read and understand the following…*

By installing your Borla Performance Exhaust System, you indicate that you have read this document and you agree with the terms stated below.

It is the responsibility of the purchaser to follow all installation instruction guidelines and safety procedures supplied with your Borla Performance Exhaust System.

Borla Performance Industries assumes no responsibility for damages occurring from misuse, abuse, improper installation, improper operation, lack of responsible care, or all previously stated reasons resulting from incompatibility with other manufacturer's products and/or systems.

Included with your Borla Performance Exhaust System is a warranty card. Please read it carefully before you begin any work on your vehicle. If you should have any questions regarding our warranty policy, installation, or any other matter pertaining to your new Borla Performance Exhaust System, please give us a call at the number provided on the warranty card.

## Minimum Required Tool List:

### TOOLS:

1 3/8” Drive Ratchet
2 3/8” Drive Extension 3”
3 15mm Socket
4 13mm Socket
5 Flat blade screwdriver
6 Pry Bar

### SHOP SUPPLIES:

1 Spray Lubricant

## Borla Performance Cat-Back™ Bill of Materials

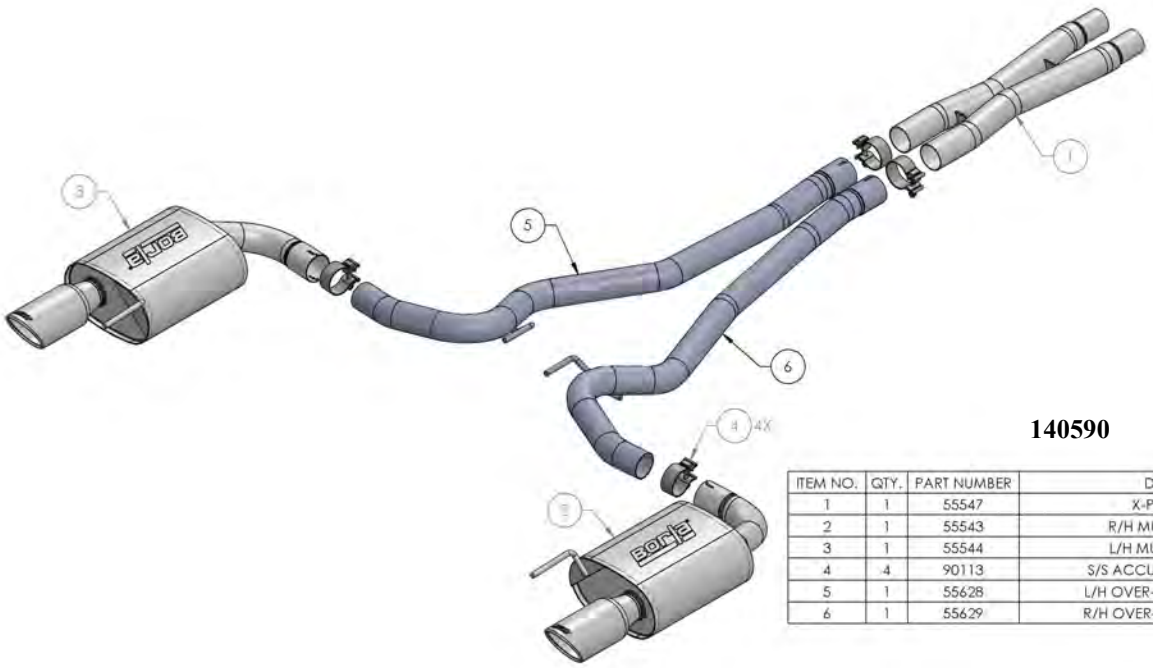


**140590**

| ITEM NO. | QTY. | PART NUMBER | DESCRIPTION |
|---|---|---|---|
| 1 | 1 | 55547 | X-PIPE ASSEMBLY |
| 2 | 1 | 55543 | R/H MUFFLER ASSEMBLY |
| 3 | 1 | 55544 | L/H MUFFLER ASSEMBLY |
| 4 | 4 | 90113 | S/S ACCUSEAL CLAMP Ø2.50 |
| 5 | 1 | 55628 | L/H OVER-AXLE PIPE ASSEMBLY |
| 6 | 1 | 55629 | R/H OVER-AXLE PIPE ASSEMBLY |

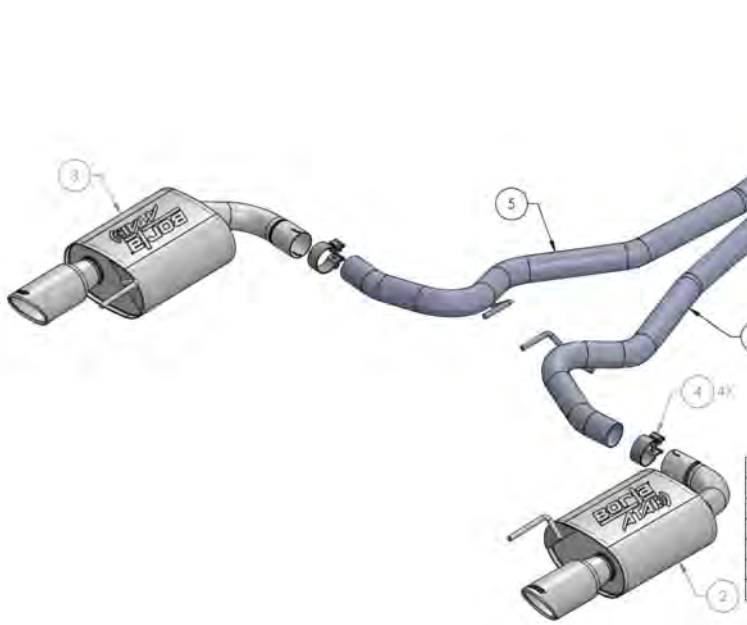


**140591**

| ITEM NO. | QTY. | PART NUMBER | DESCRIPTION |
|---|---|---|---|
| 1 | 1 | 55547 | X-PIPE ASSEMBLY |
| 2 | 1 | 55522 | R/H MUFFLER ASSEMBLY |
| 3 | 1 | 55523 | L/H MUFFLER ASSEMBLY |
| 4 | 4 | 90113 | S/S ACCUSEAL CLAMP Ø2.50 |
| 5 | 1 | 55628 | L/H OVER-AXLE PIPE ASSEMBLY |
| 6 | 1 | 55629 | R/H OVER-AXLE PIPE ASSEMBLY |

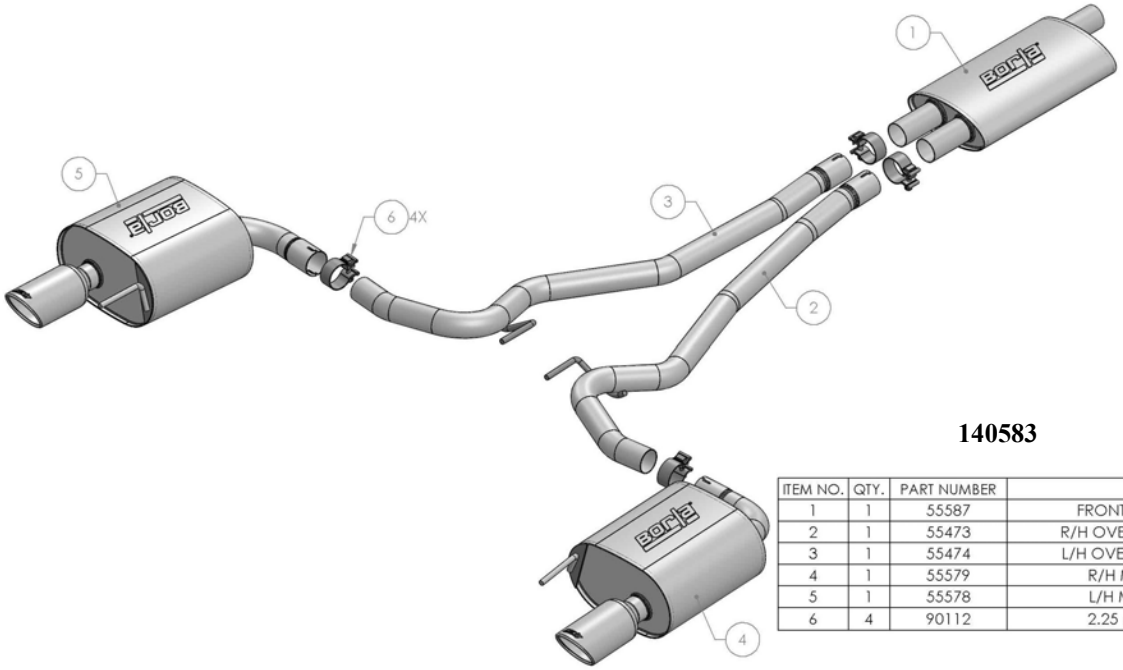


**140583**

| ITEM NO. | QTY. | PART NUMBER | DESCRIPTION |
|---|---|---|---|
| 1 | 1 | 55587 | FRONT MUFFLER ASSEMBLY |
| 2 | 1 | 55473 | R/H OVER-AXLE PIPE ASSEMBLY |
| 3 | 1 | 55474 | L/H OVER-AXLE PIPE ASSEMBLY |
| 4 | 1 | 55579 | R/H MUFFLER ASSEMBLY |
| 5 | 1 | 55578 | L/H MUFFLER ASSEMBLY |
| 6 | 4 | 90112 | 2.25 ACCUSEAL CLAMP |

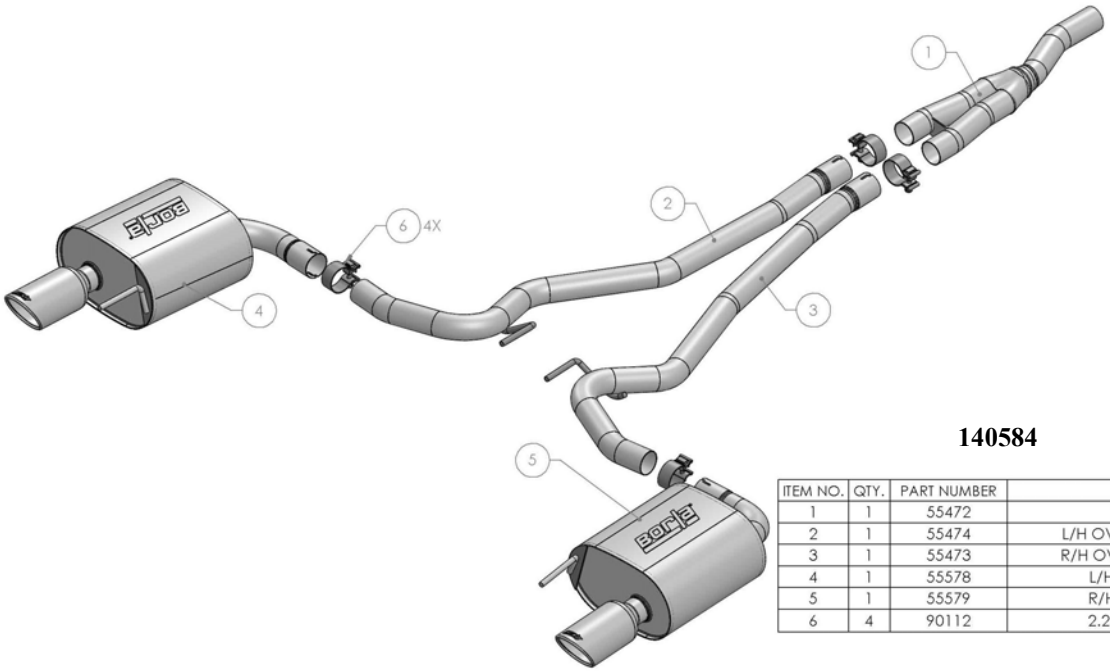


**140584**

| ITEM NO. | QTY. | PART NUMBER | DESCRIPTION |
|---|---|---|---|
| 1 | 1 | 55472 | Y-PIPE ASSEMBLY |
| 2 | 1 | 55474 | L/H OVER-AXLE PIPE ASSEMBLY |
| 3 | 1 | 55473 | R/H OVER-AXLE PIPE ASSEMBLY |
| 4 | 1 | 55578 | L/H MUFFLER ASSEMBLY |
| 5 | 1 | 55579 | R/H MUFFLER ASSEMBLY |
| 6 | 4 | 90112 | 2.25 ACCUSEAL CLAMP |

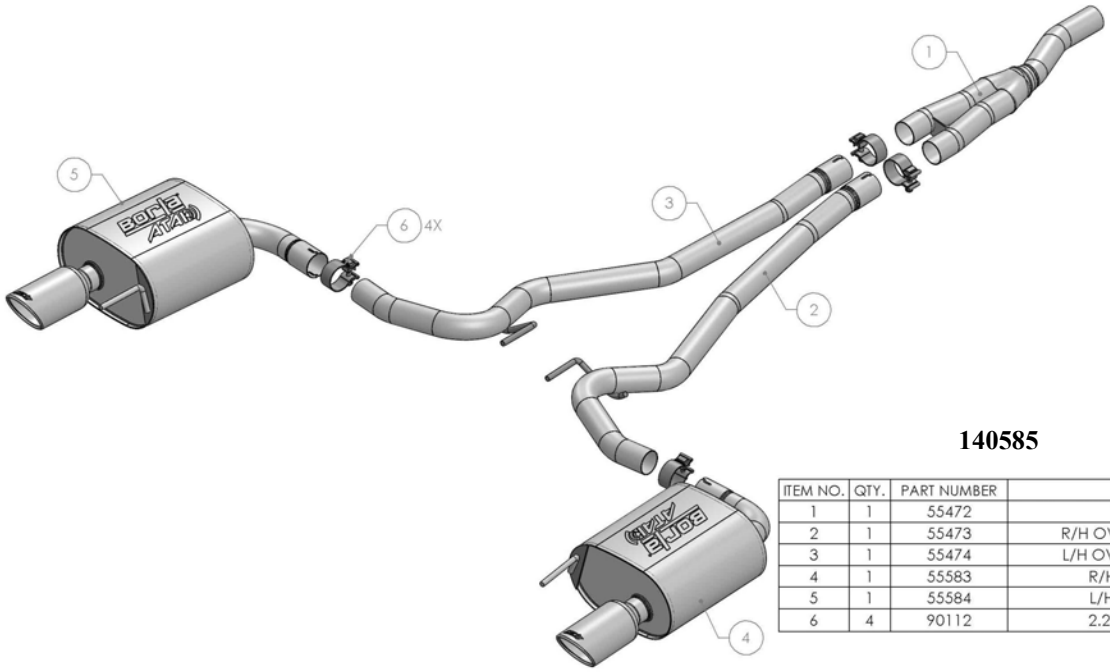


**140585**

| ITEM NO. | QTY. | PART NUMBER | DESCRIPTION |
|---|---|---|---|
| 1 | 1 | 55472 | Y-PIPE ASSEMBLY |
| 2 | 1 | 55473 | R/H OVER-AXLE PIPE ASSEMBLY |
| 3 | 1 | 55474 | L/H OVER-AXLE PIPE ASSEMBLY |
| 4 | 1 | 55583 | R/H MUFFLER ASSEMBLY |
| 5 | 1 | 55584 | L/H MUFFLER ASSEMBLY |
| 6 | 4 | 90112 | 2.25 ACCUSEAL CLAMP |

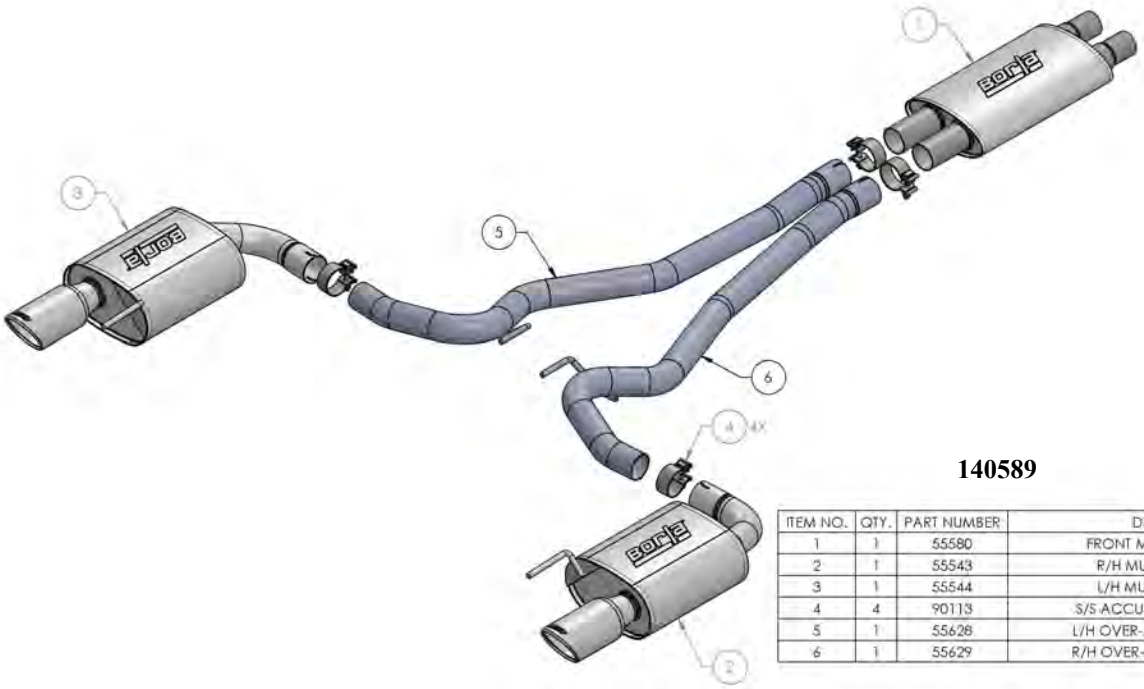


**140589**

| ITEM NO. | QTY. | PART NUMBER | DESCRIPTION |
|---|---|---|---|
| 1 | 1 | 55580 | FRONT MUFFLER ASSEMBLY |
| 2 | 1 | 55543 | R/H MUFFLER ASSEMBLY |
| 3 | 1 | 55544 | L/H MUFFLER ASSEMBLY |
| 4 | 4 | 90113 | S/S ACCUSEAL CLAMP Ø2.50 |
| 5 | 1 | 55628 | L/H OVER-AXLE PIPE ASSEMBLY |
| 6 | 1 | 55629 | R/H OVER-AXLE PIPE ASSEMBLY |

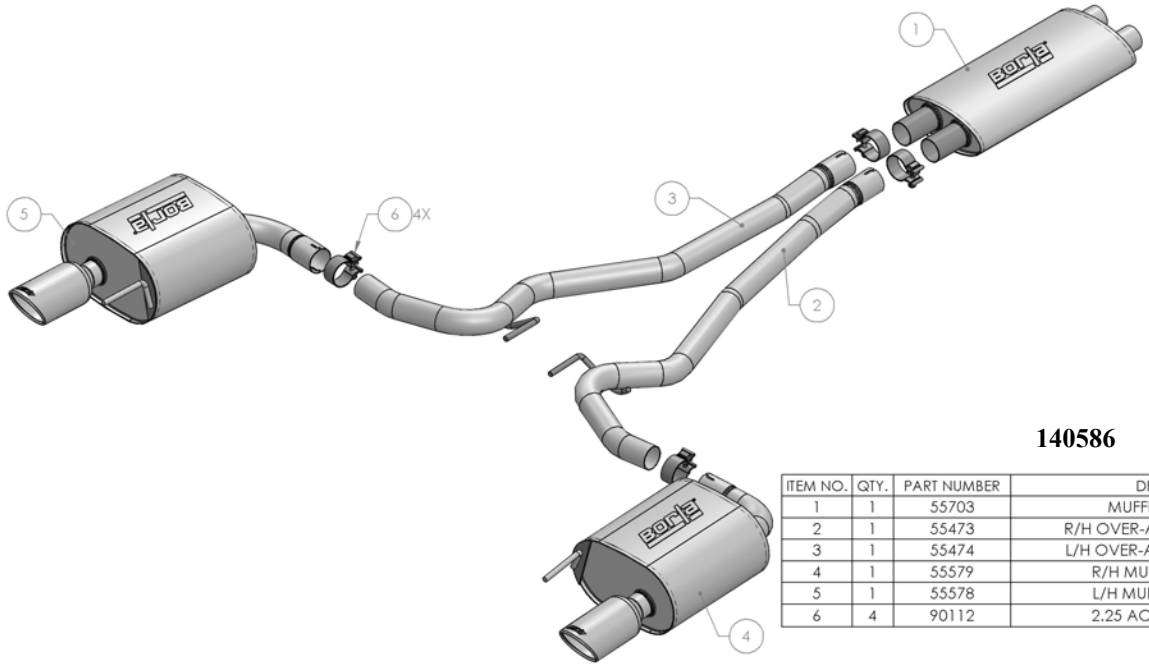


**140586**

| ITEM NO. | QTY. | PART NUMBER | DESCRIPTION |
|---|---|---|---|
| 1 | 1 | 55703 | MUFFLER ASSEMBLY |
| 2 | 1 | 55473 | R/H OVER-AXLE PIPE ASSEMBLY |
| 3 | 1 | 55474 | L/H OVER-AXLE PIPE ASSEMBLY |
| 4 | 1 | 55579 | R/H MUFFLER ASSEMBLY |
| 5 | 1 | 55578 | L/H MUFFLER ASSEMBLY |
| 6 | 4 | 90112 | 2.25 ACCUSEAL CLAMP |

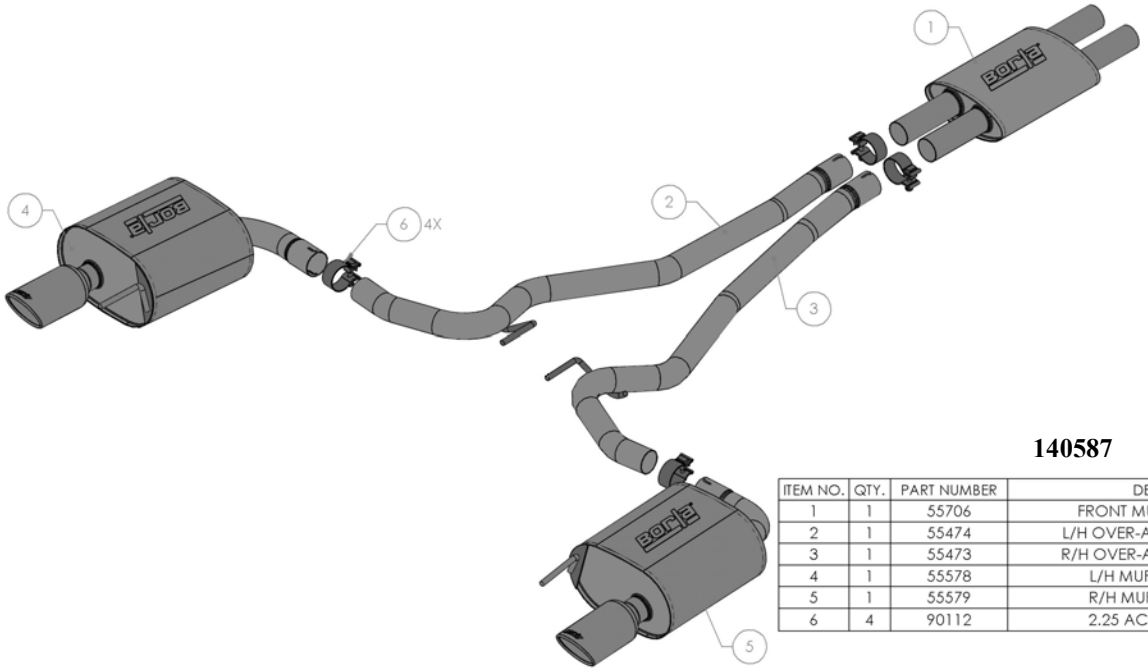


**140587**

| ITEM NO. | QTY. | PART NUMBER | DESCRIPTION |
|---|---|---|---|
| 1 | 1 | 55706 | FRONT MUFFLER ASSEMBLY |
| 2 | 1 | 55474 | L/H OVER-AXLE PIPE ASSEMBLY |
| 3 | 1 | 55473 | R/H OVER-AXLE PIPE ASSEMBLY |
| 4 | 1 | 55578 | L/H MUFFLER ASSEMBLY |
| 5 | 1 | 55579 | R/H MUFFLER ASSEMBLY |
| 6 | 4 | 90112 | 2.25 ACCUSEAL CLAMP |

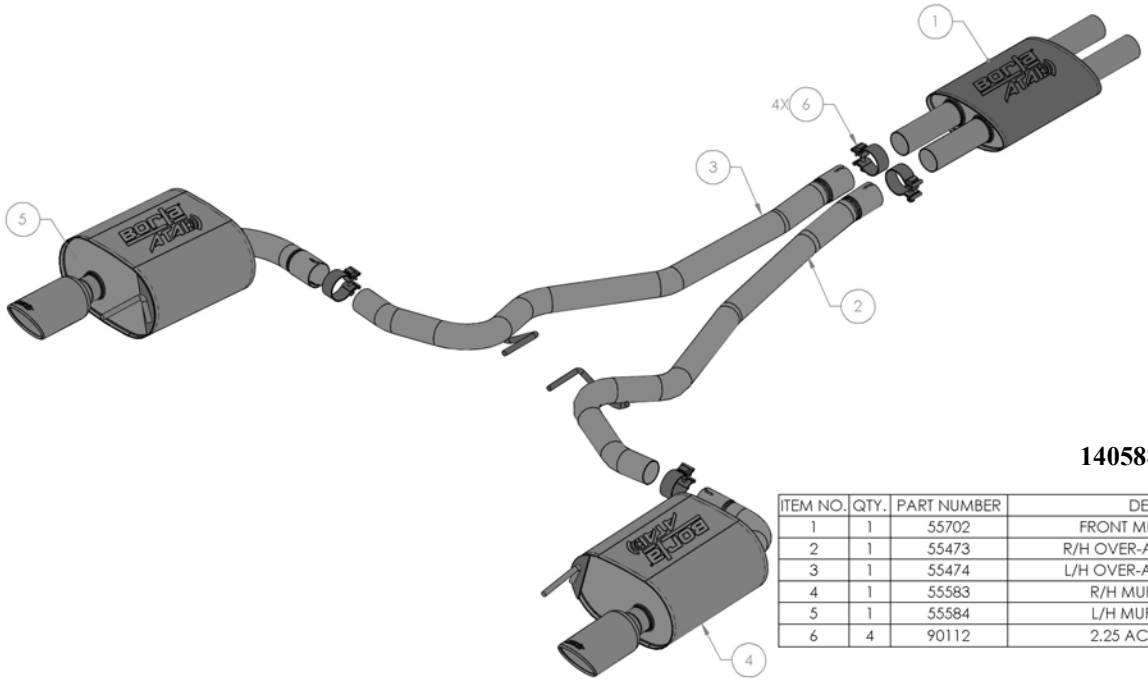


**140588**

| ITEM NO. | QTY. | PART NUMBER | DESCRIPTION |
|---|---|---|---|
| 1 | 1 | 55702 | FRONT MUFFLER ASSEMBLY |
| 2 | 1 | 55473 | R/H OVER-AXLE PIPE ASSEMBLY |
| 3 | 1 | 55474 | L/H OVER-AXLE PIPE ASSEMBLY |
| 4 | 1 | 55583 | R/H MUFFLER ASSEMBLY |
| 5 | 1 | 55584 | L/H MUFFLER ASSEMBLY |
| 6 | 4 | 90112 | 2.25 ACCUSEAL CLAMP |

**BORLA PERFORMANCE INDUSTRIES**
500 Borla Drive
Johnson City TN, 37604-7523
805-986-8600

***Caution!!! Never work on a hot exhaust system. Serious injury in the form of burns can result If the vehicle has been in use and the exhaust system is hot, allow vehicle to cool for at least 1 hour. Always wear eye protection when working under any vehicle.***

***Note: It is our recommendation that you use a hoist or hydraulic lift to facilitate the installation of your new Borla Performance Exhaust System.***

***Taking all under car safety precautions, lift the vehicle using a hoist or hydraulic lift. Once this has been done, you may begin the removal of your old exhaust system from your vehicle.***

***Note: Before removing the original exhaust system from your vehicle, please compare the parts you have received with the bill of materials provided on the previous page to assure that you have all the parts necessary for the installation of your new Borla Performance Exhaust System.***

***Note: With a used vehicle, we suggest a penetrating spray lubricant to be applied liberally to all exhaust fasteners and allowing a significant period of time for the chemical to lubricate the threads before attempting to disassemble.***

# Original Exhaust System Removal

1. PLEASE IDENTIFY YOUR PART NUMBER THEN FOLLOW INSTRUCTIONS:

   **140586, 140587, 140588, 140590, 140591, 140589 only:** Loosen (2) factory band clamps on the front factory mid-muffler. (See Fig.1)

   **140584, 140585 only:** Loosen (1) factory clamp on the front factory mid-muffler.

2. Beginning with the left-side, use a flat blade screwdriver and twist to release the pin and slide the left-side band-clamp away from the muffler. (See Fig. 2)

3. Repeat Step 2 to remove the right-side band-clamp.

4. Loosen (2) factory bolts from left-side and right-side rear rubber brackets. (See Fig. 3)

5. With help from an assistant, carefully remove the front hangars from the rubber isolators and slide the muffler assembly to rear leaving rear rubber isolators on hangars. (See Fig. 4 )

6. Factory exhaust from the vehicle. (See Fig. 5)

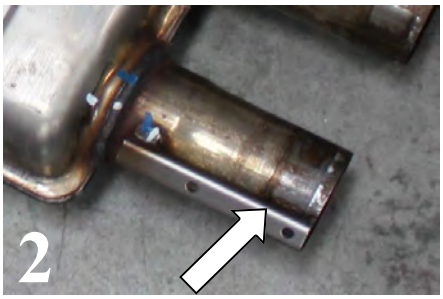


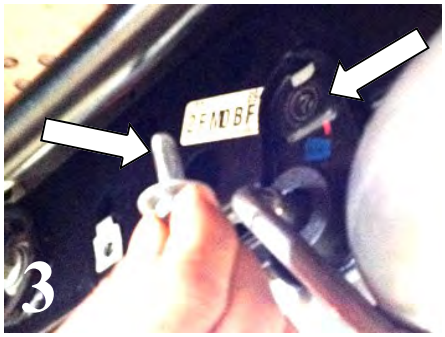

***WARNING: Use extreme caution during installation. Torque all fasteners according to manufacturer's torque values and tightening sequence. DO NOT use air impact tools to tighten fasteners on Borla Performance Exhaust Systems. Use of such tools may result in bent flanges or gasket contact areas leading to exhaust leaks.***

**NOTE: When you first start your vehicle after the installation of your new Borla Performance Exhaust System, there may be some smoke and fumes coming from the system. This is a protective oil based coating used in the manufacturing of mandrel bent performance exhaust tubing. This is not a problem and will disappear within a very short period of time after the exhaust has reached normal operating temperatures.**

**BORLA PERFORMANCE INDUSTRIES**
500 Borla Drive
Johnson City TN, 37604-7523
805-986-8600

# Borla Performance Cat-Back ™ Exhaust System Installation

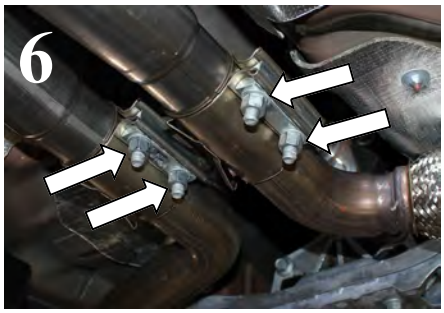


1. Remove rear rubber isolators from factory exhaust and re-install on vehicle. Reinstall bolts and tighten to 20 ft lbs. (Reverse of Fig. 3)

2. PLEASE IDENTIFY YOUR PART NUMBER THEN FOLLOW INSTRUCTIONS:

   **140586, 140587, 140588, 140590, 140591, 140589:** Replace the Left-side and Right-side factory band clamps onto the front pipes. (See Fig. 6) **DO NOT TIGHTEN THE CLAMP BOLTS.**

   **140583, 140584, 140585:** Replace the Left-side factory band clamp onto the front pipe. **DO NOT TIGHTEN THE CLAMP BOLT.**

3. Install the **L/H Over-Axle Pipe Assembly** to the Left-side of vehicle inserting the hangers into the rubber isolators. (See Fig. 7)

4. Repeat Step 3 for the **R/H Over-Axle Pipe Assembly** installation to the right-side. (See Fig. 8)

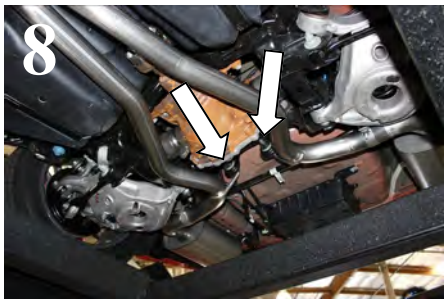


5. Starting on the left-side, place a clamp on the **L/H Muffler Assembly** inlet pipe. Position the **L/H Muffler Assembly** hangar into the rebar rubber isolator then insert into the **L/H Intermediate Pipe Assembly** . (See Fig. 9) **DO NOT TIGHTEN THE CLAMPS.**

6. Repeat Step 4 for installation of the **R/H Intermediate Pipe Assembly .** Check your exhaust system for proper clearance under the vehicle and also for tip alignment. (See Fig. 10)

7. Start tightening clamps on your new exhaust beginning at the X-Pipe and moving to the Rear Mufflers. Once position has been determined to be correct, tighten the Accuseal™ clamps to 32-35 ft. lbs. making sure the clamp bolts are centered between the notches in the pipe.

7. Before starting your vehicle, make sure to check all wires, hoses, brake lines, body parts and tires for safe clearance from the exhaust system.

8. Start vehicle and check for any leaks. If any leaks are found, determine cause (such as loose or incorrectly positioned clamp) and repair as necessary.

***WARNING: Use extreme caution during installation. Torque all fasteners according to manufacturer's torque values and tightening sequence. DO NOT use air impact tools to tighten fasteners on Borla Performance Exhaust Systems. Use of such tools may result in bent flanges or gasket contact areas leading to exhaust leaks.***

**NOTE: When you first start your vehicle after the installation of your new Borla Performance Exhaust System, there may be some smoke and fumes coming from the system. This is a protective oil based coating used in the manufacturing of mandrel bent performance exhaust tubing. This is not a problem and will disappear within a very short period of time after the exhaust has reached normal operating temperatures.**